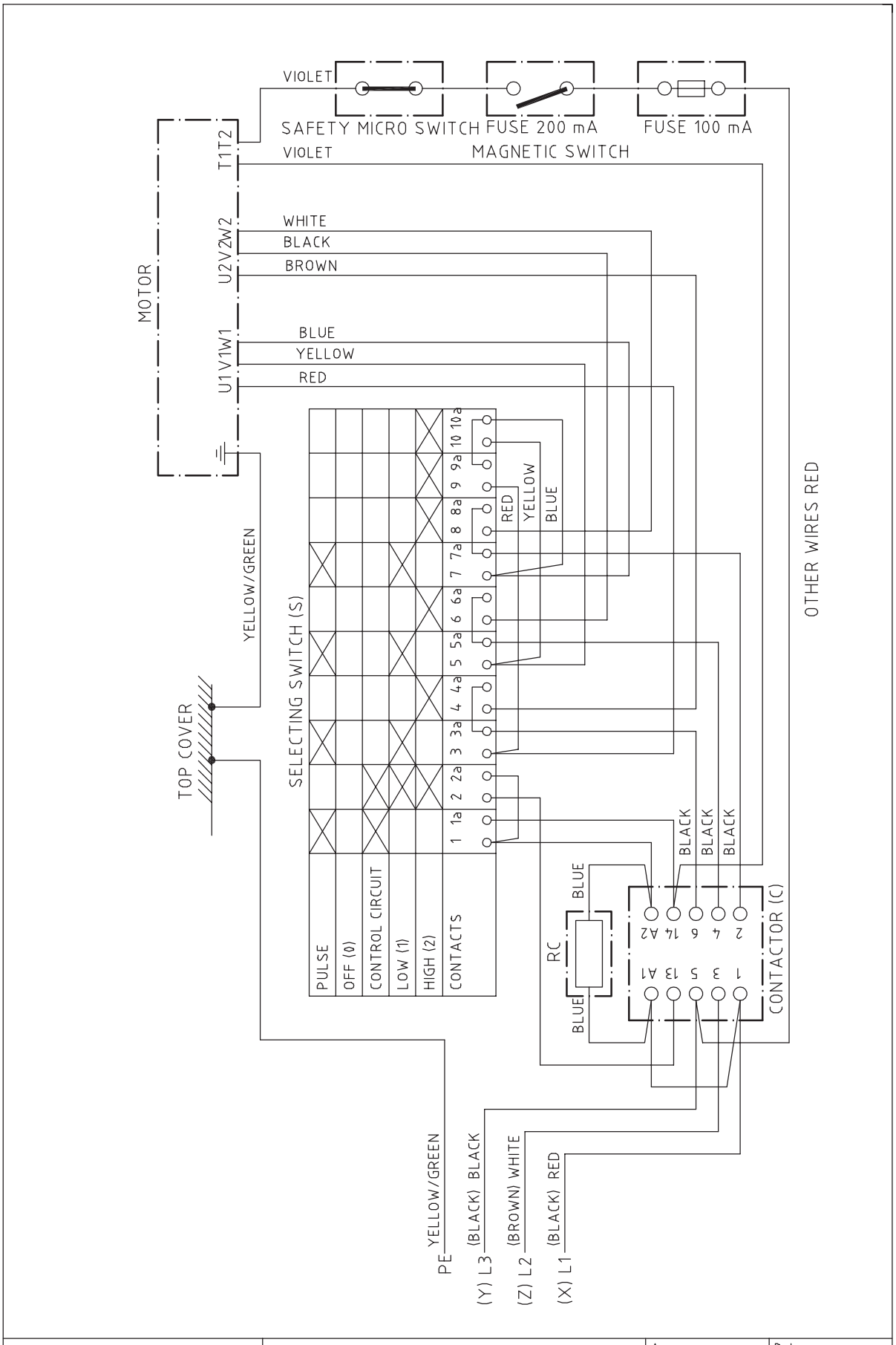

HALLDE

VCM42/62, VCB-62, VCS-62

208-240 3 50/60 W/O NEUTRAL WIRE

Appr. JSt

Date 19990210

Drawing no. 2186/A